GlidePoint® Dev Kit for Circular Touchpad

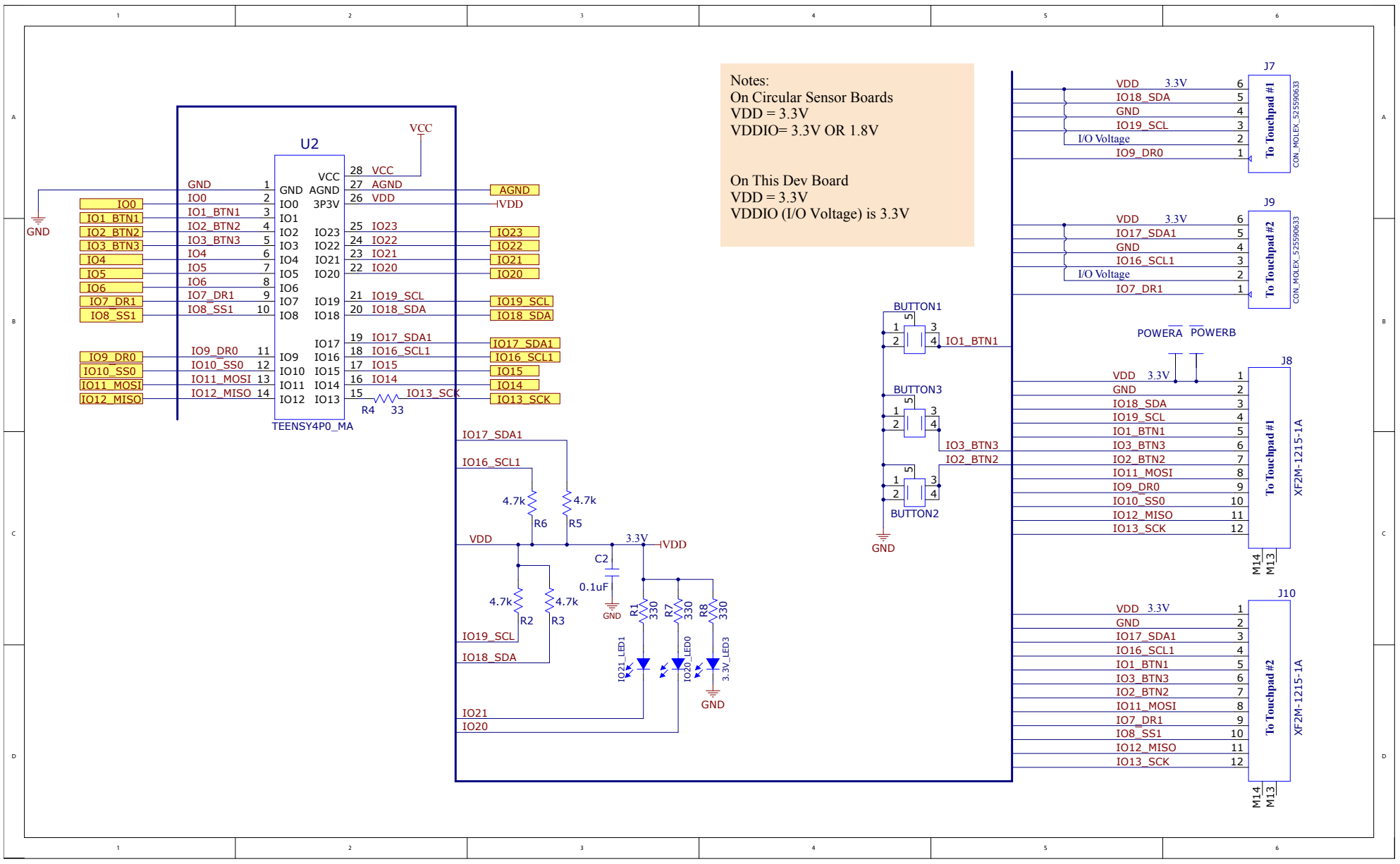

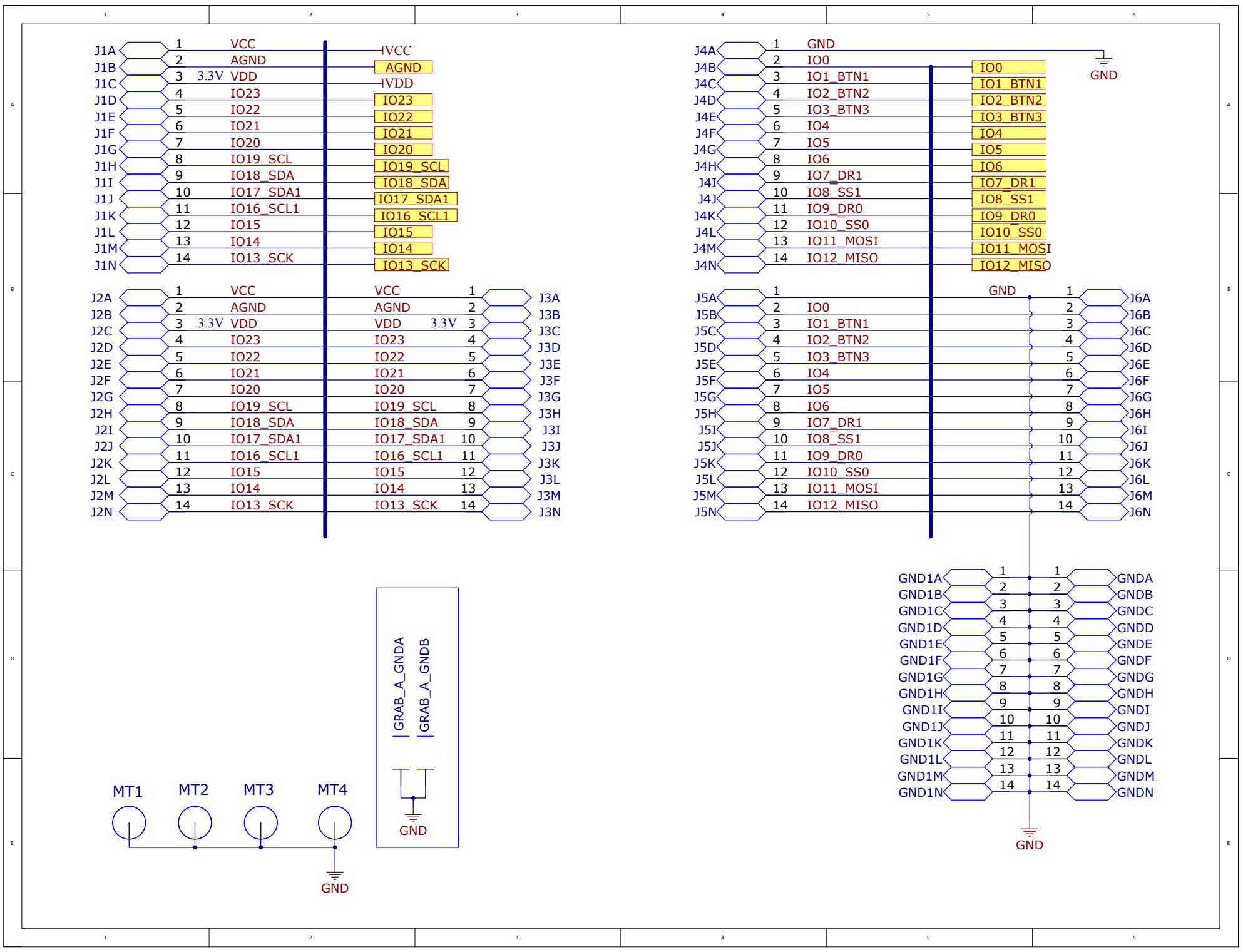

Copyright ©2023 Cirque Corporation. All Rights Reserved. Cirque®, the Cirque logo, GlidePoint® the GlidePoint logo, are trademarks of Cirque Corporation.

Cirque's touch controller platforms and technology solutions are protected by patents and additional U.S. and International patents pending. Contact Cirque for more information.